SHCHERBAN', O.N.

Union of work and science. Nauka i zhyttia 10 no. 11:4-8 N '60. (MIRA 14:4)

1. Vitse-prezident AN USSR.
(Ukraine—Research)

SHCHERBAN', O., akademik

Science, technology, and progress. Nauka i zhyttia 12 no.7:2-3 Jl '62. (MIRA 16:1)

1. AN UkrSSR i predsedatel' Gosudarstvennogo komiteta Soveta Ministrov UkrSSR po koordinatsii nauchno-issledovatel'skikh rabot.
(Technological innovations)

SHCHERBAN', O., akademik

Contribution of science to practical work. Nauka i zhyttia 12 no.2:1 F '63. (MIRA 16:4)

1. AN UkrSSR i Predsedatel' Gosudarstvennogo komiteta Soveta Ministrov UkrSSR po koordinatsii nauchno-issledovatel'skikh rabot.

(Technological innovations)

KHRENOV, K.K., akademik, otv. red.; SHVETS', I.T., red.; SHCHERBAN', O.N., red.; KUCHEROV, P.S., red.; SAMSONOV, G.V.[Samsonov, H.V.], red.; ANISIMOV, Yu.O., kand. tekhn. red.; DOBROV, G.M.[Dobrov, H.M.], kand. tekhn. nauk, red.; MATIYKO, M.M., red.; ORLIK, O.L.[Orlyk, O.L.], red.

[Essays on the history of technology in the Ukraine] Narysy z istorii tekhniky na Ukraini. Kyiv, Naukova dumka, 1964. 110 p. (MIRA 17:11)

1. Akademiya nauk URSR, Kiev. Sektor istorii tekhniki i yestestvovaniya. 2. Chlen-korrespondent AN Ukr.SSR (for Kucherov, Samsonov).

L 13274-65 EWT(m)

ACCESSION NR: AP4047798 S/0021/64/000/010/1311/1313

AUTHOR: Filippenko, L. G.; Shcherban', O. N. (Shcherban', A. N.)
(Academician AN UkrSSR)

B

19

TITLE: Utilization of heat generated by nuclear explosion for intensification of oil extraction

SOURCE: AN UkrRSR. Dopovidi, no. 10, 1964, 1311-1313

TOPIC TAGS: heat utilization feasibility

ABSTRACT: Referring to American technical literature the authors discuss the possibilities of using the heat of nuclear fission in oil extraction. They calculated the distribution of temperature in the soil, shortly following the explosion as well as a long time afterward. According to the authors, such utilization of heat is feasible. The mean temperature of the ground thus heated does not depend on the rate of the fission, but on the mechanical properties of the soil only. Orig. art. has: 7 formulas.

Card 1/2

L 13274-65

ACCESSION NR: AP4047798

ASSOCIATION: Instytut teploenergetyky AN URSR (Institute of Heat and Power Engineering, AN UkrSSR)

SUBMITTED: 14Nov63 ENCL: 00 SUB CODE: NP, TD

NO REF SOV: 000 OTHER: 001

Card 2/2

ACC NR: AP7005116 SOURCE CODE: UR/0021/66/000/009/1157/1161

AUTHOR: Baratov, E. Y.; Galitsyn, A. S.; Shchorban', O. N. (Academician AN UkrSSR)
ORG: (Institute of Engineering Heat Physics, AN UkrSSR (Instytut tekhnichnoyi teplofizyky AN UkrSSR)

TITLE: Geotemperature field during mine ventilation in regions with an acutely continental climate

SOURCE: AN UkrRSR. Dopovidi, no. 9, 1966, 1157-1161
TOPIC TAGS: Laplace transform, heat conductivity

ABSTRACT: The authors present an approximate analytical solution of equations of non-stationary thermal conductivity

$$\frac{\partial U}{\partial \tau} = a\left(\frac{\partial^2 U}{\partial r^2} + \frac{1}{r}\frac{\partial U}{\partial r}\right), \quad (\tau > 0,\ R_0 < r < \infty);$$

$$U = U_0, \quad \tau = 0;$$

$$\lim_{r\to\infty} U = U_0, \quad \tau > 0;$$

with the boundary condition

Card 1/2

0926 1640

ACC NR: AP7005116

$$\frac{\partial U}{\partial r} - \frac{\alpha}{\lambda}[U - U^*(\tau)] = 0, \qquad r = R_0;$$

$$U^*(\tau) = \begin{cases} U_1, & k\tau_2 < \tau < k\tau_2 + \tau_1 \\ U_2, & k\tau_2 + \tau_1 < \tau < (k+1)\tau_2 \end{cases} \qquad (k = 0, 1, \ldots)$$

$$(U_0 = \text{const}, U_1 = \text{const}, U_2 = \text{const}; U_1 > U_2),$$

by means of the Laplace transform.

The authors also give an expression for determining the coefficient of nonstationary heat-exchange. Orig. art. has: 1 figure and 24 formulas. /JPRS: 38,695/

SUB CODE: 20,12 / SUBM DATE: 28Sep65 / ORIG REF: 003

Card 2/2

ZNAMENSKIY, G.A.; STOLBOV, V.S.; SHCHERBAN', S.A.[deceased]; TURCHIN, P.Ye., red.; DANILOVA, Z.S., red.-leksikograf; KUZ'MIN, I.F., tekhn. red.

[French-Russian aeronautical dictionary] Frantsuzsko-russkii aviatsionnyi slovar'. Moskva, Voenizdat, 1962. 485 p. (MIRA 15:6)

(French language--Dictionaries--Russian)
(Aeronautics--Dictionaries)

POMOMAREV, V. D., akademik; SHCHERBAN, [illegible]

Some solid products of hydrochemical processing of alumino-silicates. Vest. AN Kazakh. SSR 18 no.10:28-34 O '62. (MIRA [illegible])

1. Akademiya nauk Kazakhskoy SSR (for Pomomarev).

[illegible], L.E.; SHCHERBAN, S.A.; AKHMETOV, S.F.; MUSMAGAMBETOV, KH.M.

Decomposition of various alumina containing minerals in autoclaves. Trudy Inst.met.i obog. AN Kazakh.SSR [illegible].

(MIRA 18:1)

ACHKINAZI, S., inzh.-polkovnik; GAYENKO, A., inzh.-polkovnik; SHCHERBAN', V., inzh.-podpolkovnik; ANIKEVICH, R., kapitan tekhn. sluzhby; KUZNETSOV, A., inzh.-kapitan; BIRYUKOV, A., starshiy inzh.-leytenant.

Experience in using a standard kit of universal accessories. Tankist no.2:57-60 F '58. (MIRA 11:3)

(Tanks (Military science)--Maintenance and repair)

SHCHERBAN', Valentin Lavrovich; KUZ'MINA, V.S., red.

[Ways of using fisheries equipment economically] Puti ekonomnogo ispol'zovaniia promyslovogo snariazheniia. Moskva, Pishchevaia promyshlennost', 1965. 56 p.
(MIRA 19:1)

SHCHERBAN', Ye.F. [Shcherban', IE.F.]; SOKOLOV, B.I.; GRIGORYAN, F.L. [Hryhorian, F.L.]

Using the card spinning system for processing polyacrylonitrile "prelan" fibers. Leh.prom. no.3:66-71 Jl-S '63. (MIRA 16:11)

1. Ukrainskiy nauchno-issledovatel'skiy institut po pererabotke iskusstvennogo i sinteticheskogo volokna.

SHCHERBAN', Ye.I.

Determination of hemosiderin in the spleen of white mice following roentgen irradiation. Med. rad. 5 no.12:75 '60. (MIRA 14:3)
(SPLEEN) (PIGMENTS)
(RADIATION--PHYSIOLOGICAL EFFECT)

KOCHINA, P.Ya., akademik (Novosibirsk); MOSIYENKO, N.A., kand. tekhn. nauk (Novosibirsk); SHCHERBAN', Ye.V., inzh.-gidrogeolog (Novosibirsk)

Underground waters in the Kulunda Steppe and their utilization in irrigation. Gidr. i mel. 16 no.10:15-19 O '64.
(MIRA 17:12)

SHCHERBAN', Yu.Yu.

Instruction in reading relief on topographical maps. Geog.v shkole 22 no.4:67-70 Jl-Ag '59. (MIRA 12:11)
(Maps, Topographic)

SHCHERBAN', Yuriy Yur'yevich; DUKACHEV, M.P., polkovnik, red.; KUZ'MIN, I.F., tekhn. red.

[Manual on methods of artillery survey for students of training units and soldiers] Posobie po metodike topograficheskoi podgotovki kursantov uchebnykh podrazdelenii i soldat. Moskva, Voenizdat, 1963. 116 p. (MIRA 17:2)

SHCHERBAN', Z.I. (Leningrad, Vasil'yevskiy ostrov, 3-ya liniya, d.16, kv.7);
MANOYLOV, S.Ye. (Leningrad, S-15, Suvorovskiy prospekt, d.57, kv.7)

Histoautoradiographic study of certain peculiarities of matabolic processes in organs of tumor-bearing mice. Vop.onk. 5 no.6:681-686 '59. (MIRA 12:12)

1. Iz biokhimicheskogo otdela (zav. - prof. S.Ye. Manoylov) i patologoanatomicheskogo otdela (zav. - doktor med.nauk L.V. Funshteyn) TSentral'nogo nauchno-issledovatel'skogo instituta meditsinskoy radiologii Ministerstva zdravookhraneniya SSSR (dir. - prof. M.N. Pobedinskiy).

(NEOPLASMS, metab.
proteins in kidneys & liver histoautoradiographic determ. in mice (Rus))
(PROTEINS, metab.
kidneys & liver, histoautoradiographic determ. in tumor-bearing mice (Rus))
(KIDNEYS, metab.
proteins, histoautoradiographic determ. in tumor-bearing mice (Rus))
(LIVER, metab.
same)

KOGAY, Ye.S.; SHCHERBAN', Z.P.

Bloodsucking mosquitoes and their distribution in the changing landscape of Tashkent Province. Uzb. biol. zhur. 7 no.6:50-53 '63. (MIRA 17:6)

1. Institut zoologii i parazitologii AN UzSSR.

ACC NR: AP6013009 (N) SOURCE CODE: UR/0413/66/000/009/0087/0087

INVENTOR: Gershgal, D. A.; Daragan-Sasunchov, V. I.; Shcherbanenko, T. B.

ORG: None

TITLE: An ultrasonic echo ranging level indicator. Class 42, No. 181327

SOURCE: Izobreteniya, promyshlennyye obraztsy, tovarnyye znaki, no. 9, 1966, 87

TOPIC TAGS: liquid level indicator, ultrasonic equipment, electronic measurement

ABSTRACT: This Author's Certificate introduces: 1. An ultrasonic echo ranging liquid level indicator containing reference and measurement units with pickups, a probe pulse generator, and a level readout unit connected to the measurement unit. The device is designed for improved accuracy and for matching the operating times of the reference unit, measurement pickup and readout unit. Connected between the reference and measurement units is a reference pulse distributor with outputs corresponding in number to predetermined points for beginning level measurement. This distributor may be made in the form of a controlled delay line. 2. A modification of this indicator in which the outputs of the reference unit and probe pulse generator are connected to a coincidence circuit with an output which excites the measurement pickup when one of the reference pulses is generated. This output is connected through the reference pulse distributor to the probe pulse shaper. 3. A

Card 1/2

UDC: 681.128.82

ACC NR: AP6015669

modification of this indicator for measuring liquid levels at various temperatures and densities without additional adjustment. The reference pulse distributor in the instrument is made in the form of a counter with decoder. 4. A modification of this indicator in which the reference pulse distributor is made in the form of a shift register.

1--reference unit; 2--measurement pickup; 3--readout unit; 4--measurement unit; 5--reference pulse distributor; 7--probe pulse generator; 8--coincidence circuit; 9--probe pulse shaper

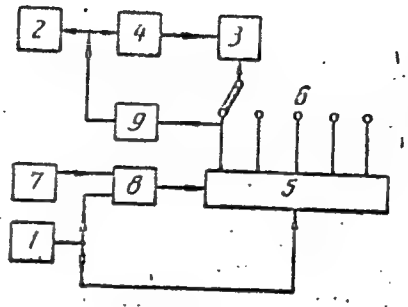

SUB CODE: 09/ SUBM DATE: 27Aug64

Card 2/2

SHCHERBASHIN, Yu.D.

Studying the economics of the process of ammonia synthesis from the viewpoint of an optimum production management. Khim. prom. 41 no.2:30-34 F '65. (MIRA 18:4)

GAZIZOV, M.S., kand. geol.-miner. nauk; LEBEDYANSKAYA, Z.P., inzh.; UNKOVSKAYA, N.F., inzh.; KOSTENKO, V.I., inzh.; PROZOROV, L.B., kand. tekhn.nauk; BESPALOV, P.M., inzh.; KRAVCHUK, S.V., inzh.; KRUPKIN, L.V., inzh.; KRUPKIN, L.V., inzh.; BEZPALOVA, S.I., inzh.; SHCHERBATENKO, A.P., inzh.; KOROTKOV, G.V., kand. geol.-mineral. nauk, retsenzent; VASIL'YEV, P.V., doktor geol.-mineral. nauk, retsenzent; SHEVYAKOV,L.D.,akad.,otv.red.; MAN'KOVSKIY,G.I.,otv.red.; STOLYAROV,A.G.,red.izd-va; GUSEVA,A.P.,tekhn.red.; RYLINA,Yu.V.,tekhn. red.

[Experience in lowering the water table in mineral deposits under complex hydrogeological conditions] Opyt vodoponizheniia na mestorozhdeniiakh poleznykh iskopaemykh so slozhnymi gidrogeologicheskimi usloviiami. Moskva, Izd-vo Akad. nauk SSSR, 1963. 411 p. (MIRA 16:5)

1. Akademiya nauk SSSR. Institut gornogo dela. 2. Chlen-korrespondent Akademii nauk SSSR zaveduyushchiy Laboratoriyey spetsial'nykh sposobov prokhodki gornykh vyrabotok i vodoponizheniya Nauchno-issledovatel'skogo instituta Kurskoy magnitnoy anomalii (for Man'kovskiy).

(Water, Underground) (Ore deposits)

[illegible]

[illegible] diagnosis [illegible] in [illegible] spheres.
Gov. [illegible] Sb. - [illegible] 1[illegible].

[illegible] Surgery-Diagnosis [illegible] from
S. [illegible] Dir. [illegible], Surgery Khirurg - [illegible]
[illegible] prof. S.S. [illegible], Moskva.

"X-Ray Diagnosis of Dermatomyositis and its Complications."

Report submitted for the 27th Congress of Surgeons of the USSR, Moscow, 21-28 May 1960.

Sergiyenko, I. K. - Candidate of Medical Sciences

GAL'PERIN, E.I., kand. med. nauk; SHCHERBATENKO, M.K., kand. med. nauk

Simultaneous examination of the portal and the biliary systems (splenoportocholangiography). Khirurgiia 39 no.8:63-65 Ag '63. (MIRA 17:6)

1. Iz Moskovskogo gorodskogo nauchno-issledovatel'skogo instituta skoroy pomoshchi imeni N.V. Sklifosovskogo (nauchnyy rukovoditel' - chlen-korrespondent AMN SSSR, zasluzhennyy deyatel' nauki prof. B.A. Petrov, direktor - zasluzhennyy vrach UkrSSR M.M. Tarasov).

GAL'PERIN, E.I., kand.med.nauk; SHCHERBATENKO, M.K., kand.med.nauk

Single-stage splenoportography in portal hypertension. Khirurgiia 36 no.10:132-134 O '60. (MIRA 13:11)

1. Iz Moskovskogo gorodskogo nauchno-issledovatel'skogo instituta skoroy pomoshchi imeni N.V. Sklifosovskogo (nauchnyy rukovoditel' - zasluzhennyy deyatel' nauki prof. B.A. Petrov, dir. - zasluzhennyy vrach USSR M.M. Tarasov).
(HYPERTENSION) (ANGIOGRAPHY)

[illegible] ; [illegible]SKAYA, L.N.;
[illegible]

Azyg[illegible] [illegible] gastrointestinal hemorrhage. Khirurgiia 40 no.1:
119-123 [illegible] (MIRA 17:11)

[illegible] nauchno-issledovatel'skiy institut skoroy
[illegible] imeni N.V. Skliforovskogo [illegible] A.N. Tarasov, nauchnyy
[illegible] - [illegible] prof. B.A. Petrov).

SHCHERBATENKO, M.K., kand. med. nauk (Moskva)

Roentgenological observations on healing in esophageal perforation. Klin. med. 41 no.2:45-48 F'63 (MIRA 17:3)

1. Iz rentgenologicheskogo otdeleniya (rukovoditel' - kand. med. nauk, M.K.Shcherbatenko) Moskovskogo gorodskogo nauchno-issledovatel'skogo instituta skoroy pomoshchi imeni Sklifosovskogo (dir.-zasluzhennyy vrach UkrSSR M.M. Tarasov, nauchnyy rukovoditel' prof. B.A. Petrov).

SHCHERBENKO, M.K., kand. med. nauk

Methodology of emergency X-ray examination in gastrointestinal hemorrhages. Vest. rent. i rad. 39 no.5:28-33 S-O '64. (MIRA 18:3)

1. Nauchno-issledovatel'skiy institut skoroy pomoshchi imeni Sklifosovskogo (glavnyy khirurg - chlen-korrespondent AMN SSSR zasluzhennyy deyatel' nauki prof. B.A. Petrov), Moskva.

ANISIMOV, V.Ye. (Kazan'); BEREZOVSKIY, B.S. (Kazan'); SHCHERBATENKO, S.I. (Kazan')

Second Volga Valley Conference of Therapeutists. Kaz.med.zhur. 40 no.5:102-104 S-O '59. (MIRA 13:7)
(THERAPEUTICS)

SHCHERBATENKO, S.I. (Kazan')

Plenum of the All-Union Committee on the Study of Rheumatic Fever and Joint Diseases in the Presidium of the Academy of Medical Sciences of the U.S.S.R. Kaz.med.zhur. 40 no.5:104-106 S-O '59. (MIRA 13:7)

(RHEUMATIC FEVER)

SHCHERBATENKO, S.I., dotsent

Acetylcholine and cholinesterase of the blood in collagen diseases. Kaz.med.zhur. no.5:11-13 S-O '60. (MIRA 13:11)

1. Iz kafedry fakul'tetskoy terapii (zav. - prof. Z.I.Malkin) Kazanskogo meditsinskogo instituta.
(CHOLINE)
(CHOLINESTERASE)
(COLLAGEN DISEASES)

SHCHERBANENKO, S.Ya., gornyy inzh.

Proposed flowsheet requires further study; response to P.M. Ul'iakhin's article entitled "Leaving waste rock in mines." Ugol' Ukr. 3 no.3:44-45 Mr '59. (MIRA 12:5)

1. Stalingiproshakht.
(Mine filling)

SHCHERBATENKO, G.T.

Pregnancy and melanoma. Akush. i gin. 33 no.2:99-100 Mr-Ap '57. (MLRA 10:6)

1. Iz kafedry akusherstva i ginekologii No. 2 (zav. prof. A.B.Gillerson) Omskogo meditsinskogo instituta imeni M.I.Kalinina.

(MELANOMA, in pregn.
multiple metastases of melanoma of shank)
(PREGNANCY, in various dis.
melanoma, enhancement of growth & multiple metastases from shank)

SHCHERBATENKO, G.T.

Congenital cyst of the left lung. Pediatriia 36 no.11:74 N '58.
(MIRA 12:8)
1. Iz vtoroy kafedry akusherstva i ginekologii Omskogo meditsinskogo instituta imeni M.I. Kalinina.
(CYSTS) (LUNGS--DISEASES)

[illegible] "X-[illegible] [illegible] instruments, [illegible] [illegible]." [illegible] (Lab. [illegible] Central Inst. for [illegible] Instrument [illegible]), [illegible] (11,[illegible], 153)

SHCHERBATENKO, M.K., kand.med.nauk

X-ray diagnosis of complications resulting from esophageal perforation. Vest. rent. i rad. 36 no.6:54-56 N-D '61. (MIRA 15:2)

1. Iz rentgenovskogo otdeleniya (zav. - kand.med.nauk V.I.Gruzdev [deceased]) i 1-y khirurgicheskoy kliniki (zav. - prof. S.V.Lobachev) Nauchno-issledovatel'skogo instituta skoroy pomoshchi imeni N.V.Sklifosovskogo (dir. - zasluzhennyy vrach USSR M.M.Tarasov).
(ESOPHAGUS_WOUNDS AND INJURIES)

SHCHERBATENKO, M.K. (Moskva, Sredn.Pereyaslavskaya ul.,d.7/2,kv.9)

X-ray diagnosis of esophageal perforations caused by foreign bodies or instruments. Grud. khir. 1 no.5:81-86 S-O '61. (MIRA 15:3)

1. Iz rentgenovskogo otdeleniya (zav. - kand.med.nauk V.I. Gruzdev) i pervoy khirurgicheskoy kliniki (rukovoditel' - prof. S.V. Lobachev) Instituta imeni N.V. Sklifosovskogo (dir. - zasluzhennyy vrach USSR M.M. Tarasov).
(ESOPHAGUS--WOUNDS AND INJURIES)

SHCHERBATENKO, M.K., kand.med.nauk

Metal foreign bodies in the esophagus and pharynx. Zhur. ush. nos. i gorl. bol. 21 no.4:71 Jl-Ag '61. (MIRA 15:1)

1. Iz rentgenovskogo otdeleniya (zav. - kand.med.nauk V.I.Gruzdev) i 1-y khirurgicheskoy kliniki (zav. - prof. S.V.Lobachev) Nauchno-issledovatel'skogo instituta skoroy pomoshchi imeni Sklifosovskogo.
(ESOPHAGUS--FOREIGN BODIES) (PHARYNX--FOREIGN BODIES)

SHCHERBATENKO, M.K., kand.med.nauk (Moskva)

X-ray diagnosis of lesions of the pericardium and major vessels in foreign bodies in the esophagus. Klin.med. 40 no.10:43-47 O '62. (MIRA 15:12)

1. Iz rentgenologicheskogo otdeleniya Nauchno-issledovatel'skogo instituta skoroy pomoshchi imeni Sklifosovskogo (dir. - zasluzhennyy vrach UkrSSR M.M.Tarasov).

(ESOPHAGUS--FOREIGN BODIES)
(PERICARDIUM--WOUNDS AND INJURIES)

USSR/Medicine - Sulfa Drugs Aug 49
Pulmonary Diseases

"Treatment of Pulmonary Abscesses With Large Doses of Sulfonamide," S. I. Shcherbatenko, Kazan', 1/4 p

"Sov Med" No 8

Since ordinary doses of sulfidine and streptocide proved ineffective in treating pulmonary abscesses, decided to try large doses of sulfonamides as follows: first day, 4.0 grams of sulfasol followed at 4-hour intervals, respectively, by 3.0, 2.0, and 1.0 grams. Streptocide 10.08% in 10 cc of

[redacted] 152T59

USSR/Medicine - Sulfa Drugs (Contd) Aug 49

40% solution of urotropine was given internally simultaneously. Treatment proved effective if begun early enough. Produced no toxic effects.

152T59

MALKIN, Z.I.; SHCHERBATENKO, S.I.; BEREZOVSKIY, B.S.; KLYUCHAREVA, S.G.; SALAMATINA, V.V. (Kazan')

Therapeutic tactics in the treatment of rheumatic endomyocarditis and myocarditis. Vop.revm. 1 no.2:44-48 Ap-Je '61. (MIRA 16:4)

(RHEUMATIC HEART DISEASE)

SHCHERBATENKO, S.I., dotsent

Treatment of rheumatoid arthritis. Kaz.med.zhur. no.5:53-54 S-O '62. (MIRA 16:4)

1. Kafedra fakul'tetskoy terapii (zav. - prof. Z.I.Malkin) Kazanskogo meditsinskogo instituta.
(ARTHRITIS, RHEUMATOID) (DRUGS--PHYSIOLOGICAL EFFECT)

VOLKOVA [illegible] (Kazan'); SHCHERBATENKO, S.I., dotsent (Kazan')

Scientific conference on the problem "Catechol amines and their role in the regulation of the functions of the body." Kaz. med. zhur. 4:89-92 Jl-Ag'63 (MIRA 17:2)

KHAMITOV, Kh.S., dotsent; SHCHERBATENKO, S.I., dotsent

Role of the acetylcholine and cholinesterase system in pathology.
Kaz. med. zhur. no.5:89-93 S-O'63 (MIRA 16:12)

1. Kafedra normal'noy fiziologii (zav. - prof. I.N.Volkova)
i kafedra fakul'tetskoy terapii (zav. - prof. Z.I.Malkin)
Kazanskogo meditsinskogo instituta.

SHCHERBATENKO, S.I.

Cholinergic and adrenergic reactions in rheumatic fever and their biological importance. Nauch. trudy Kaz. gos. med. inst. 14:579-580 '64. (MIRA 18:9)

1. Kafedra gospital'noy terapii No.2 (zav. - dotsent S.I.Shcherbatenko) Kazanskogo meditsinskogo instituta.

SHCHERBATENKO, V. V.

Agriculture & Plant & Animal Industry.

Making rye bread. Moskva, Pishcheprom izdat, 1951.

Monthly List of Russian Accessions, Library of Congress, April 1952. Unclassified.

SHCHERBATENKO, V. V.

Vitamins B_1, B_2, and PP in bread from different kinds of flour. V. N. Bukin, L. Ya. Auerman, Z. I. Zaltseva, L. S. Kutseva, V. F. Pashovkin, and V. V. Shcherbatenko (A. N. Bakh Inst. Biochem. and All-Union Sci. Research Inst. Bread-Baking Ind., Moscow). *Voprosy Pitaniya* 12, No. 4, 29-34(1953).—Of the vitamins naturally occurring in the flour, bread retains for rye flour and wheat flour, resp., B_1 70 and 80-8%, B_2 88 and 64-79%, PP 95-100 and 95-100%. The retention of vitamins B_1 and B_2 by wheat-bread varies with the grade of the flour. Of added vitamins, rye bread retains $^2/_3$ of B_1, B_2, and PP; wheat bread retains B_1 75-80, B_2 50-64, and PP 80-90%. Part of the vitamin B_2 in the flour is firmly combined with protein, and may escape estn. Fermentation of the dough frees the vitamin B_2, and thus seemingly high figures are obtained for bread, masking the deterioration. Rye and wheat contain 3 mg./kg. of vitamin B_2, instead of the previously reported 1 mg./kg. For an adult engaged in light labor it is necessary to enrich all sorts of bread with vitamin B_2, rye bread with vitamin PP, and some kinds of wheat bread with vitamins B_1 and PP.

A. Mirkin

SHCHERBATENKO, V.V., inzhener; SMOLINA, N.I., kandidat tekhnicheskikh nauk; MIKULINSKAYA, L.R., kandidat tekhnicheskikh nauk; BROVKIN, S.I., inzhener

Methods of reducing loss in bakery product output. Standartizatsiia no.3:58-63 My-Je '55. (MLRA 8:10)
(Baking)

Digestibility and nutritional value of rye bread depending on its moisture content. A. Yu. Gribina, V. V. Shelterbatenko, L. R. Mikulinskaya, and V. F. Pashovkin (All-Union Sci. Research Inst. Bakery Ind., Moscow). *Voprosy Pitaniya* 14, No. 2, 27–30(1955).—Three different samples of rye bread, differing in their moisture contents (55, 51, and 48%, resp.), excluding the bread crust, have been studied for their organoleptic properties (taste, porosity, color of the crust), phys. properties (percentage of porosity, sp. vol., compressibility, relative elasticity, and adhesiveness), and chem. properties (moisture, acidity, sugar, cellulose, and fat) and for the utilization of their proteins by human organism. The results indicate that the phys. properties are greatly changed by the moisture content of bread; that the normal taste of rye bread is affected when the moisture content is over 50%; that the chem. compn. of the bread is only slightly changed (sugar 1.32, 1.43, and 1.53; cellulose 1.02, 1.05, and 1.28; and fat 1.31, 1.3, and 1.38% for the breads contg. 55, 51, and 48% moisture, resp.); and that the nutritional value of the bread decreases with increasing moisture content (av. utilization values for the original bread dietary proteins utilized by 4 men during a 3-day period with increasing the moisture content of the bread were 74.23, 71.52, and 69.4%, resp.). B. Wierbicki

Sci, nutrition, AMS USSR

SHCHERBATENKO, V.V.; AUERMAN, L.Ya.; GOGOBERIDZE, N.I.

Losses of dry matter and moisture in the process of bread manufacture. Trudy MTIPP 4:127-132 '56. (MLRA 9:10)

(Bread)

GOGOBERIDZE, N.I.; AUERMAN, L.Ya.; SHCHERBATENKO, V.V.

Investigating the effect of the heating kinetics of baking on the quality of rye bread. Trudy MTIPP 4:133-146 '56. (MLRA 9:10)

(Bread) (Baking)

SHCHERBATENKO, V.V.;SMIRNOVA, V.V.

Structural changes of some porous colloidal materials in the process of drying. [with English summary in insert] Koll.zhur. 18 no.5:615-620 S-O '56. (MIRA 9:11)

1. Vsesoyuznyy nauchno-issledovatel'skiy institut khlebopekarnoy promyshlennosti, Moskva.
(Dough--Drying)

SHCHERBATENKO, V. V., Cand Tech Sci -- (diss) "Determination of quantitative indicators of the technological process and ~~evaluation~~ Calculation of the output of bread." Mos, 1957. 27 pp with graphs (Min of Higher Education USSR, Mos Technological Inst of Food Industry), 120 copies (KL, 1-58, 119)

SHCHERBATENKO, V.V.; CHIZHOVA, K.N.; SHKVARKINA, T.I.; LUR'YE, T.S.

New method for preparing rye and wheat doughs. Khleb. i kond. prom. 1 no.1:7-11 '57. (MLRA 10:4)

1. Vsesoyuznyy nauchno-issledovatel'skiy institut khlebopekarnoy promyshlennosti.

(Dough)

SHCHERBATENKO, V.V.; PRONIN, S.I.

New methods for preparing wheat dough in the U.S.A. Khleb. i kond. prom. 1 no.4:43-45 Ap '57. (MLRA 10:5)

1. Vsesoyuznyy nauchno-issledovatel'skiy institut khlebopekarnoy promyshlennosti.
(United States--Dough)

28-6-12/40

AUTHORS: Shcherbatenko, V.V., and Mikulinskaya, L.R. Engineers

TITLE: Objective Evaluating Methods for Quality of Bread (Ob"yektivnyye metody otsenki kachestva khleba)

PERIODICAL: Standartizatsiya, 1957, # 6, pp 43-44 (USSR)

ABSTRACT: This article describes the mechanical methods used by the USSR bread-baking plants for evaluating bread properties.

The following instruments are described and illustrated: photometer "ФТ -2", devised by the Institute of Light Technique (Svetotekhnicheskiy institut); device "ЦМ -3" for evaluating the color of flour; device " ВНИИХП-2" for evaluating the compressibility and relative resilience of bread. The general work principles of the instruments are described.

There are 2 photographs.

ASSOCIATION: All-Union Scientific Research Institute of Baking Industry (VNIIKhP).(Vsesoyuznyy nauchno-issledovatel'skiy institut khlebopekarnoy promyshlennosti)

AVAILABLE: Library of Congress

Card 1/1 1. Industry-USSR 2. Bread-Quality control

SHCHERBATENKO, V.V.; MIKULINSKAYA, L.R.

Statistical method for determining relative uniformity of porosity in porous materials. Zav.lab.23 no.2:216-217 '57. (MIRA 10:3)

1. Nauchno-issledovatel'skiy institut khlebopekarnoy promyshlennosti.
(Porosity) (Mathematical statistics)

SHCHERBATENKO, Vadim Vladimirovich; LUR'YE, Tamara Samoylovna; PATT, Vitaliy Aleksandrovich; MURASHEVA, O.I., red.; SOKOLOVA, I.A., tekhn.red.

[Use of molasses in the baking industry] Primenenie patoki v khlebopekarnom proizvodstve. Moskva, Pishchepromizdat, 1960. 34 p. (MIRA 14:6)
(Bread) (Sirups)

VOLKOV, Yu.Ye.; SHCHERBATENKO, V.V.

Preservation of rye bread in polyethylene wrappings subjected to ultraviolet rays. Kons.i ov. prom. 16 no.2:26-28 F '61. (MIRA 14:4)

1. TSentral'nyy nauchno-issledovatel'skiy institut khlebopekarnoy promyshlennosti.

(Bread--Microbiology) (Radiation sterilization)

GORYACHEVA, A.F.; SHCHERBATENKO, V.V.; SMOLINA, N.I.; GOGOBERIDZE, N.I.

Relationship between increased intensity and time of dough mixing and the improvement of bread quality. Trudy TSNIIKHP no.8:78-85 '60. (MIRA 15:8)

(Bread)

SHCHERBATENKO, V.V.; MIKULINSKAYA, L.R.; BEGANSKAYA, L.S.; ZUBKOV, I.A.; GRINEVICH, K.P.; KOTRELEV, V.N.; VOLODIN, P.A.

Use of organosilicon compounds and fluoroplast in the baking industry. Trudy TSNIIKHP no.8:85-88 '60. (MIRA 15:8)
(Bakers and bakeries--Equipment and supplies)
(Protective coatings)

SHCHERBATENKO, V.V.; MIKULINSKAYA, L.R.; BEGANSKAYA, L.S.; ZUBKOV, I.A.; GRINEVICH, K.P.

Testing organosilicon compounds for the glazing of bread molds. Trudy TSNIIKHP no.8:88-89 '60. (MIRA 15:8)
(Bakers and bakeries—Equipment and supplies)
(Protective coatings)

SMOLINA, N.I.; SHCHERBATENKO, V.V.; STRELKOV, V.A.

Industrial testing of the method of briquet rusk manufacture.
Trudy TSNIIKHP no.8:89 '60. (MIRA 15:8)
(Baking)

SHCHERBATENKO, V.V.; [illegible], M.I.; ZEL'MAN, G.S.; BROVKIN, S.I., red.

[Preservation of bread freshness] Sokhranenie svezhesti khleba. Moskva, Tsentr. in-t nauchno-tekhn. informatsii [illegible] prom-sti, 1962. [illegible] p. (MIRA 17:8)

SHCHERBATENKO, V.V.; GOGOBERIDZE, N.I.; GOLUBEV, N.A.; FIRSOVA, A.V.; NIKOLAYEVA, M.N.; YEVSEYEVA, A.M.; KONTORSKAYA, Z.D.

Development of optimum systems for baking different wheat bread varieties in order to improve their taste and flavor characteristics. Trudy TSNIIKHP no.10:43-52 '62.

(MIRA 18:2)

STOLYAROVA, L.F.; SHCHERBATENKO, V.V.; LUR'YE, T.S.; BEREZNITSKAYA, V.A.

Bread making without fermentation of intermediate products and dough prior to its dividing. Trudy TSNIIKHP no.10:53-62 '64. (MIRA 18:2)

MAYAROVA, L.F.; SHCHERBATENKO, V.

Method for rapid bread making from break type flour. Trudy TSNIIKH. no.10:63-71 '62. (MIRA 18:2)

GORYACHEVA, A.F.; SHCHERBATENKO, V.V.; AUERMAN, I.Ya.

Effect of the degree of mechanical processing of the dough on its ripening time and bread quality. Trudy TSNIIKHP no.10:72-81 '62. (MIRA 18:2)

SHCHERBATENKO, V.V.; MIKULINSKAYA, L.R.; BEGANSKAYA, L.S.; CHERESHKEVICH, L.V.; CHEGODAYEV, D.D.; YAVZINA, N.Ye.; GRINEVICH, K.P.

Investigating the possibility of bread baking in molds coated with polymeric materials. Trudy TSNIIKHP no.10:82-86 '62.
(MIRA 18:2)

SHCHERBATENKO, V.V.; MIKULINSKAYA, L.R.; BORZENKOVA, I.Ye.; POLYAKOV, V.V., red.; SELIVERSTOVA, R.L., red.izd-va; SOTNIKOVA, N.F., tekhn. red.

[Collection of technological instructions for baked products in rural bakeries] Sbornik tekhnologicheskikh instruktsii na khlebobulochnye izdeliia dlia sel'skogo khlebopecheniia. Moskva, Izd-vo TSentrosoiuza, 1963. 134 p. (MIRA 17:3)

1. TSentral'nyy soyuz potrebitel'skikh obshchestv SSSR. Upravleniye organizatsii proizvodstv.

YEFIMOVICH, A. N.; SHCHELBATENKO, V. V.; NASEUT'KO, L. N.

Effect of dynamic loads on bread quality; Vliianie dinamicheskikh nagruzok na kachestvo khleba. Moskva, TSentr. inst. nauchno-tekhn. informatsii pishchevoi promyshl., [illegible] p. (MIRA 18:5)

SHCHERBATENKO, V.V.; GOGOBERIDZE, N.I.; ZEL'MAN, G.S.

[Effect of baking conditions on the quality of bread] Vliianie rezhima vypechki na kachestvo khleba. Moskva, TSentr. in-t nauchno-tekhn. informatsii pishchevoi promyshl., 1964. 34 p. (MIRA 18:8)

L 62569-65

ACCESSION NR: AP5019203 UR/0344/65/000/007/0006/0008

664.562

18
16
B

AUTHORS: Shcherbatenko, V. V.; Gogoberidze, N. I.; Volkov, Yu. Ye.

TITLE: The quality of bread treated for extended storage

SOURCE: Khlebopekarnaya i konditerskaya promyshlennost', no. 7, 1965, 6-8

TOPIC TAGS: food, food preservation

ABSTRACT: Several sterilization methods were developed for the 6-month preservation of rye bread in 1-kg loaves wrapped in soft covering. The methods involved a thermal 3-hour process, a 5-hour process, a two-step (1 hr, 40 min) process, and alcohol sterilization. Bread tested by the alcohol, the 3-hour, and the two-step methods was the usual GOST 2077-54 type, while bread tested in the 5-hour process had a lower moisture content. Although organoleptic and analytical indices of bread remained unchanged after the alcohol treatment, it acquired the smell and aftertaste of ethyl alcohol. Very slight alteration in bread quality resulted from the two-step procedure. After a 3-hour sterilization the taste and smell of the product resembled that of the scalded-dough bread. The 5-hour process resulted in a dark and pulpy interior with an unpleasant smell and aftertaste. Thermal treatment increased the concentration of water-soluble carbohydrates and resulted in

Card 1/2

L 62569-65

ACCESSION NR: AP5019203

2

dark colored products. Optimal storage temperature was 20C. Bread treated by the alcohol and the two-step methods had greater stability under higher storage temperatures (30-35C). A decreased sterilization period resulted in better quality and greater preservation ability at higher temperatures. Detailed experimental results are tabulated and illustrated graphically. Orig. art. has: 3 tables and 3 figures.

ASSOCIATION: Vsesoyuznyy nauchno-issledovatel'skiy institut khlebopekarnoy promyshlennosti (All-Union Scientific Research Institute of the Bread Baking Industry)

44

SUBMITTED: 00 ENCL: 00 SUB CODE: LS

NO REF SOV: 001 OTHER: 002

Card 2/2

SHCHERBATOV, D.I.; AFANAS'YEV, F.D.; YERSHOV, A.D.

Aleksandr Antonovich Tvalchrelidze; obituary. Izv. AN SSSR. Ser. geol. 22 no.12:109-110 D '57. (MIRA 11:2)
(Tvalchrelidze, Aleksandr Antonovich, 1881-1957)

SHCHERBATOV, D. P.

7

Photometric determinations in the near infrared region of a spectrum. ~~I. D. P. Shcherbatov~~ and P. L. Shevtsov. *Izvest. Akad. Nauk Kazakh. S.S.R., Ser. Khim.* 1957, No. 1, 25-31(in Russian).—The absorption of water in the infrared region (λ = 0.995 μ) was utilized in the determination of the concn. of AcOH in aq. solns. The absorption of light by water in AcOH did not obey Beer's law. Nevertheless, it was shown that this method was adaptable for the detn. of water-rich org. or inorg. liquids. For AcOH solns. contg. 70, 45, 5, 15, 20, 90, 65, 0, 10, and 35% AcOH the concn. of the acid from infrared spectrum of water was resp.: 69, 45, 4, 14, 20.5, 89, 65, 0, 10, and 34%. 63 references.

A. P. Kotloby

4

4E4j

SHCHERBATOV, F. M.

"On the Problem of Methods of Deepening the Arable Layer of Turf Podzolic Soil." Cand Agr Sci, Moscow Agricultural Acadimeni K. A. Timiryazev, Moscow, 1954. (RZhBIOL, No 8, Dec 54)

Survey of Scientific and Technical Dissertations Defended at USSR Higher Educational Institutions (12)
SO: Sum. No. 556, 24 Jun 55

PREOBRAZHENSKIY, Yu.B., kandidat meditsinskikh nauk; SHCHERBATOV, I.I., professor, direktor.

Case of lengthy retention of a foreign body in the respiratory tracts. Pediatriia no.3:69-71 My-Je '53. (MLRA 6:8)

1. Klinika bolezney ukha, nosa i gorla pediatricheskogo fakul'teta II Moskovskogo meditsinskogo instituta imeni I.V.Stalina.
(Respiratory organs--Foreign bodies)

SHCHERBATOV, I.I., professor (Moskva).

Cholesteatoma of the maxillary sinuses. Vest.oto-rin. 15 no.3:7-12 My-Je '53. (MLRA 6:8)

(Nose, Accessory sinuses of--Tumors)

SHCHERBATOV, I.I.

KRUCHININA, I.L.; SHCHERBATOV, I.I., professor, zaveduyushchiy.

Congenical cysts and fistulas of the nose in children. Vest.oto-rin. 15 no.3:20-23 My-Je '53. (MLRA 6:8)

1. Kafedra bolezney ukha, gorla i nosa pediatricheskogo fakul'teta II Moskovskogo meditsinskogo instituta imeni I.V.Stalina. 2. Oto-laringologicheskoye otdeleniye detskoy klinicheskoy bol'nitsy imeni N.F.Filatova.
(Nose--Diseases) (Fistula) (Cysts)

SHCHERBATOV, I.I.;KRUCHININA, I.L.

Blood transfusion in children in otolaryngological practice. Vest. otorinolar., Moskva 15 no.4:12-16 July-Aug 1953. (CLML 25:1)

1. Professor for Shcherbatov; Assistant for Kruchinina. 2. Of the Otolaryngological Clinic of the Pediatric Faculty of Second Moscow Medical Institute imeni I. V. Stalin and of the Children's Clinical Hospital imeni N. F. Filatov.

BAZIYEVA, S.S.; SHCHERBATOV, I.I., professor, zaveduyushchiy.

Metal foreign bodies in the bronchi. Vest.oto-rin. 15 no.5:64-66 S-O '53. (MLRA 6:11)

1. Kafedra bolezney ukha, gorla i nosa pediatricheskogo fakul'teta II Moskovskogo meditsinskogo instituta im. I.V.Stalina na baze bol'nitsy im. N.F.Filatova. (Bronchi--Foreign bodies)

[illegible], I.I., [illegible] E.

Experimental study of the development of the internal ear. Trudy gos.nauch.-issl.inst.ukha, gorla i nosa. 6:422-448 '55. (MIRA 12:10)

([illegible]) (TRANSPLANTATION OF ORGANS, TISSUES, ETC.)

SHCHERBATOV, I.I., professor

Tonsillectomy in children. Vest. oto-rin. 17 no.2:18-21 Mr-Ap '55.
Vest.oto-rin. 17 no.2:18-21 Mr-Ap '55. (MLRA 8:7)

1. Iz kliniki bolezney ukha, gorla i nosa (dir. prof. I.I.Shcherbatov) pediatricheskogo fakul'teta II Moskovskogo meditsinskogo instituta imeni I.V.Stalina.
(TONSILLITIS, surgery,
in child.)

SHCHEMBATOV, I.I., professor.

Prague conference dedicated to the problem of the streptococcal infections - angina and scarlet fever. Vest.oto-rin 17 no.3:86-90 My-Je '55. (MLRA 8:9)
(THROAT--DISEASES) (SCARLET FEVER)

SHCHERBATOV, I.I., professor

"Restoration of hearing in otosclerosis by mobilization of a fixed membrane of the stapes" [in English]. S.Rosen. Reviewed by I.I. Shcherbatov. Vest.oto-rin. 18 no.5:75-77 S-O '56. (MLRA 9:11)
(OTOSCLEROSIS) (EAR--SURGERY)

SHCHERBATOV, I.I., prof.

Cysts of the larynx [with summary in English]. Vest.oto-rin. 19 no.4:22-27 Jl-Ag '57. (MIRA 10:11)

1. Iz kafedry bolezney ukha, gorla i nosa (zav. - prof. I.I. Shcherbatov) pediatricheskogo fakul'teta II Moskovskogo meditsinskogo instituta.
(LARYNX, cysts
laryngocele-like, case reports)

SHCHERBATOV, I.I., prof. (Moskva)

Congenital deformities of the nose [with summary in English]. Vest. oto-rin. 20 no.1:18-21 Ja-F '58. (MIRA 11:3)

1. Iz kafedry bolezney ukha, gorla i nosa pediatricheskogo fakul'teta II Moskovskogo meditsinskogo instituta imeni N.I.Pirogova.
(NOSE, abnorm.
in child., plastic surg. (Rus)

KHILOV, K.L., prof.; SHCHERBATOV, I.I., prof.

International Congress of Otorhinolaryngologists in the U.S.A.
Vest.oto-rin. 20 no.1:124-130 Ja-F '58. (MIRA 11:3)
(WASHINGTON, D.C.--OTORHINOLARYNGOLOGY--CONGRESSES)

BRYUM, B.I.; SHCHERBATOV, I.I.; GINGOL'D, A.I.

Significance of tomography in the detection of noncontrast foreign bodies in the bronchi in children. Pediatriia 37 no.9:54-58 S '59. (MIRA 13:2)

1. Iz rentgenodiagnosticheskogo otdela (zaveduyushchiy - prof. I.A. Shekhter) Nauchno-issledovatel'skogo rentgeno-radiologicheskogo instituta Ministerstva zdravookhraneniya RSFSR (direktor - dotsent I.G. Lagunova) i kafedry ukha, gorla i nosa pediatricheskogo fakul'teta II Moskovskogo meditsinskogo instituta imeni N.I. Pirogova (zaveduyushchiy I.I. Shcherbatov) na baze Detskoy klinicheskoy bol'nitsy imeni N.F. Filatova (glavnyy vrach M.N. Kalugina).
(BRONCHI for. bodies)

SHCHERBATOV, IVAN I.

"The thyroid function and the sensitivity to bacterial antigens in chronic maxillary and ethnoidal sinusitis in children."

report submitted for the Seventh Intl. Congress of Otorhinolaryngology, Paris, 23-29 July 1961

Moscow, USSR

DOBROMYL'SKIY, Filipp Isaakovich, prof.; SHCHERBATOV, Ivan Ivanovich, prof.; Prinimal uchastiye BALTIN, M.M., prof.; RABINOVICH, M.G., red.; LYUDKOVSKAYA, N.I., tekhn. red.

[Accessory sinuses of the nose and their connection with diseases of the orbit and the lacrimal ducts] Pridatochnye pazukhi nosa i ikh sviaz' s zabolevaniiami glaznitsy i slezo-otvodiashchikh putei. 2 izd., perer. i znachitel'no dop. Moskva, Medgiz, 1961. 287 p. (MIRA 15:4)
(NOSE, ACCESSORY SINUSES OF) (ORBIT (EYE))—DISEASES)
(LACRIMAL ORGANS—DISEASES)

VELIKORUSSOVA, N.V., dotsent

Treatment of papillomatosis of the larynx in children by intravenous administration of novocaine. Vest.otorin. 24 no.6: 73-76 N-D'62. (MIRA 16:7)

1. Iz kliniki bolezney ukha, gorla i nosa (zav. kafedroy - prof. I.I.Shcherbatov) pediatricheskogo fakul'teta II Moskovskogo meditsinskogo instituta imeni N.I.Pirogova.
(LARYNX--TUMORS) (NOVOCAINE)
(INJECTIONS, INTRAVENOUS)

VOZNESENSKIY, A.N., prof.; VOL'FKOVICH, M.I., prof.; GESHELIN, A.I., prof.[deceased]; GORDYSHEVSKIY, T.I., prof.; YERMOLAYEV, V.G., prof.; ZARITSKIY, L.A., prof.; KOTS, L.Ya., prof.; LIKHACHEV, A.G., zasl. deyatel' nauki prof.; PROSKURYAKOV, SHUL'GA, A.O., prof.; NEYMAN, L.V., prof., red.; SHCHERBATOV, I.I., prof., red. doma; TIKHOMIROVA, G.I., red.; PREOBRAZHENSKIY, Yu.B., red.; CHULKOV, I.F., tekhn.red.

[Multivolume manual on otorhinolaryngology] Mnogotomnoe rukovodstvo po otorinolaringologii. Otv. red. A.G.Likhachev. Moskva, Medgiz. Vol.4. [Diseases of the upper respiratory tract] Zabolevaniia verkhnikh dykhatel'nykh putei. Red. toma L.V.Neiman. i I.I.Shcherbatov. 1963. 518 p. (MIRA 17:3)

1. Chlen-korrespondent AMN SSSR (for Likhachev).

SHCHERBATOV, I.I., prof.

Removal of foreign bodies from the bronchi in children under X-ray control. Vest. oto-rin. 25 no.2:50-55 Mr-Ap '63. (MIRA 17:1)

1. Iz kafedry bolezney ukha, nosa i gorla (zav. - prof. I.I. Shcherbatov) pediatricheskogo fakul'teta II Moskovskogo meditsinskogo instituta imeni N.I. Pirogova.

DEGTYAREV, A.S.; SHCHERBAKOV, N.I.

Using pneumatic elements in sheet metal working dies. Kuz.-shtam.proizv. 5 no.7:41-44 Jl '63. (MIRA 16:9)